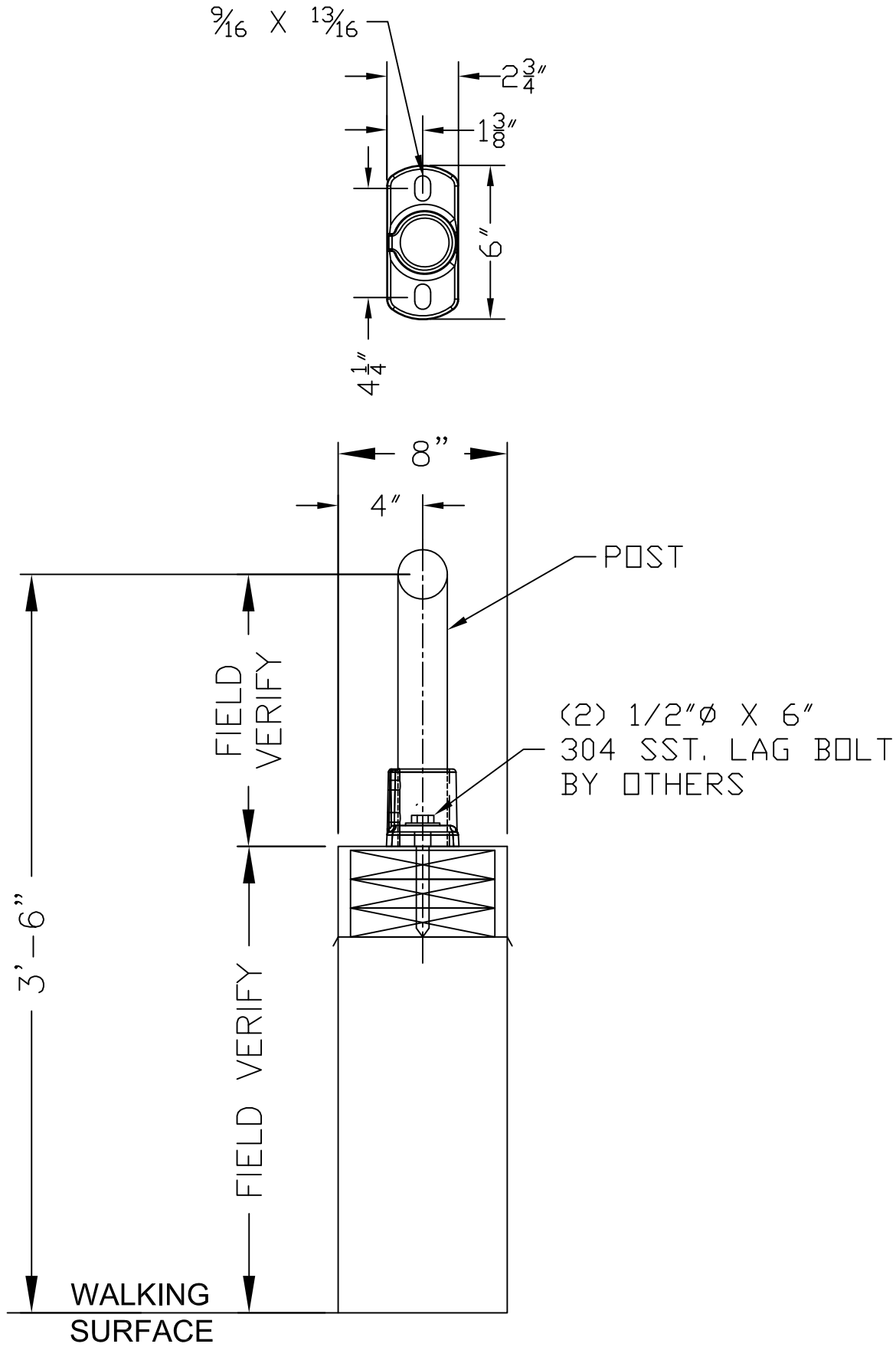

#46 BASE FLANGE
WOOD STRUCTURE PARAPET WALL

THIS DRAWING AND ALL THE INFORMATION THEREIN IS THE PROPERTY OF THE HOLLAENDER MFG. CO., IS CONFIDENTIAL AND MUST NOT BE MADE PUBLIC, NOR COPIED, NOR USED, TO THE DISADVANTAGE OF SAID HOLLAENDER MFG. CO. AND IS SUBJECT TO RETURN ON DEMAND.

COPYRIGHT 0000 , HOLLAENDER MANUFACTURING CO.

NO.	REVISIONS	DATE	APPROVED
0	RELEASED FOR APPROVAL	9/15/10	BW

Hollaender®
STRUCTURAL ENGINEERING GROUP

HOLLAENDER MFG.
10285 WAYNE AVENUE
CINCINNATI, OH 45215-6399
PH: (800) 772-8800
FX: (800) 772-8806
WWW.HOLLAENDER.COM

DRAWN BY: GG	APPROVED BY: BW	DATED: 3-11-2014
PROJECT NO: N/A		SCALE: NTS
FINISH: NOTED		DRAWING NO: XXXX-S
MATERIAL: ALUMINUM		SHEET 1 OF 1